NCC199CDV Commercial Water Heating System (CR60) Specification

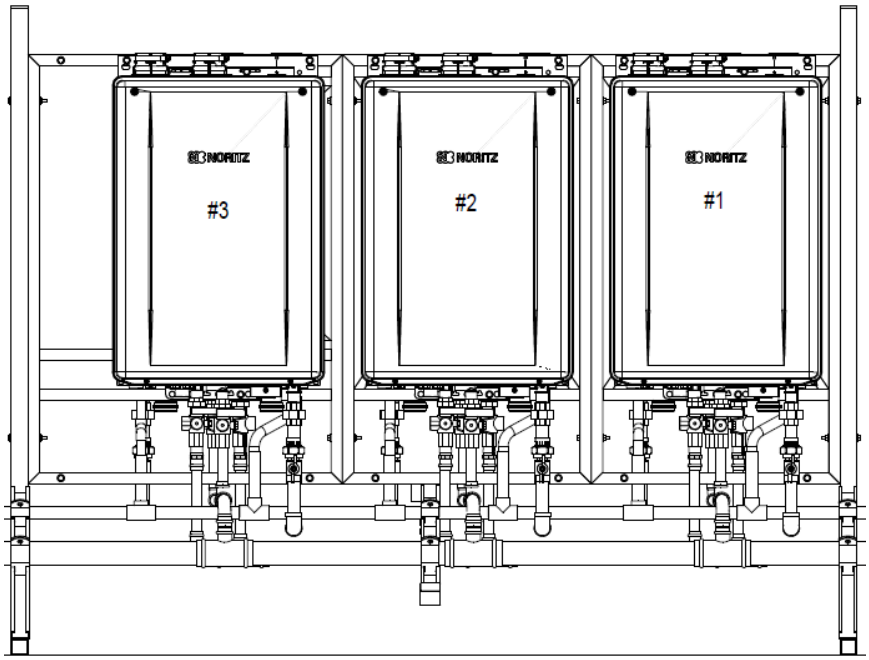

Floor Standing Rack (CDV Units)
6 Water Heaters

The Noritz Commercial Water Heating System (CR60) is a pre-fabricated racking solution designed to be a time and labor saving solution for installing multiple Noritz tankless water heaters.

Features and Benefits

- Ultra efficient condensing water heaters with 0.97 UEF (98% thermal efficiency)
- Turndown of up to 67:1 (CR60-FS-6) with BTU range of 18,000-1,199,400 BTUH per CR60
- Ultra low NOx – complies with SCAQMD 14 ng/J (20 ppm) NOx emission levels
- Ability to connect multiple CR60 up to 24 water heaters on a single system
- Compatible with PVC, CPVC, or PP venting – up to 150 ft (individually vented) or 200 ft (common vented)
- Common vent capable up to 6 units on a single exhaust system without the need for any additional accessories
- Wi-Fi Compatible
- Manufactured with highly corrosion-resistant aluminum
- Indoor or outdoor compatible
- 2” powder coated gas piping
- 2” hot and cold water piping
- System controller (SC-401-6M) included and installed for controlling up to 6 units
- Remote controller included (field connected) for adjusting temperatures and monitoring system operation
- Condensate manifold pre-piped for simple connection to condensate disposal system
- Isolation valves with pressure relief valves installed on each unit
- All rigid pipe connections
- Hoist rings provided for easy lifting (floor standing models only)
- Optional floor support (wall hanging models only) included for easy wall installation
- Designed to fit through a standard 32” width doorway
- Delivered in an engineered crate

Optional Accessories for Use with CR60 Racks

PVC Concentric Termination (× 1)
2 in. (50 mm) : [PVC-2CT]
3 in. (75 mm) : [PVC-3CT]

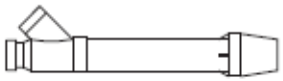

3 in. (75 mm) Horizontal Hood Termination
[PVT-HL]

2 in. SV Conversion Kit (× 1)
[SV-CK-2]

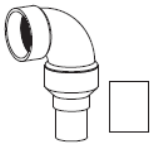

- 90° Elbow (With Inlet Screen)
- 2 in. × 3 in. Increaser coupling
- 2 in. Pipe
- Installation Manual (Check List)

Universal Concentric Vent Kit
[PVC-UCVK]

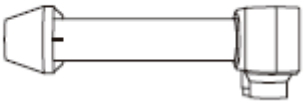

Outdoor Vent Cap (× 1)
[VC-6]

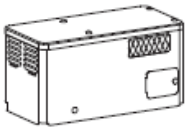

Low Profile Termination Kit
2 in.: [PVC-2LPT]
3 in.: [PVC-3LPT]

ULC S636 / UL 1738 certified for use in both Canada and USA

Bird Screen for 2 in. (50 mm) PVC
[VT2-PVCS]

Plastic Rain Cap
[PRC-1]

Not approved for use in Canada.

Bird Screen for 3 in. (75 mm) PVC
[VT3-PVCS]

Neutralizer (× 1)
[NT20A]
(For up to 16 Water Heaters)

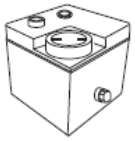

Noritz Connect Wireless Adapter
NWCC-ADAPTER (X1)
[NAW-1 US]

Noritz Connect Wireless Adapter enables users to:
- Remote control (Power ON/OFF, Adjust set temperature)

For more information, visit the Noritz America website (http://wifi.noritz.com/).

Commercial Water Heating System Parts Number & Main Components

Commercial Water Heating System Wall Hanging			
Model Number	**Rack Type**	**Configuration**	**Illustration**
CR60-WH-2-NG	2 Unit, Wall Hanging Rack, NG	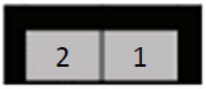	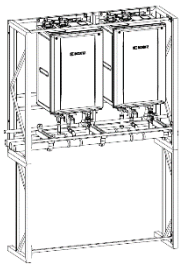
CR60-WH-2-LP	2 Unit, Wall Hanging Rack, LP		
CR60-WH-3-NG	3 Unit, Wall Hanging Rack, NG	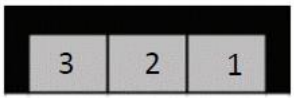	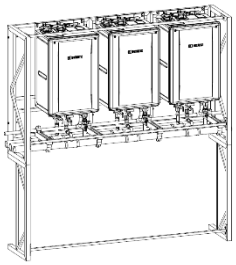
CR60-WH-3-LP	3 Unit, Wall Hanging Rack, LP		

Illustrated: CR60-WH-2 (shown with optional floor support)

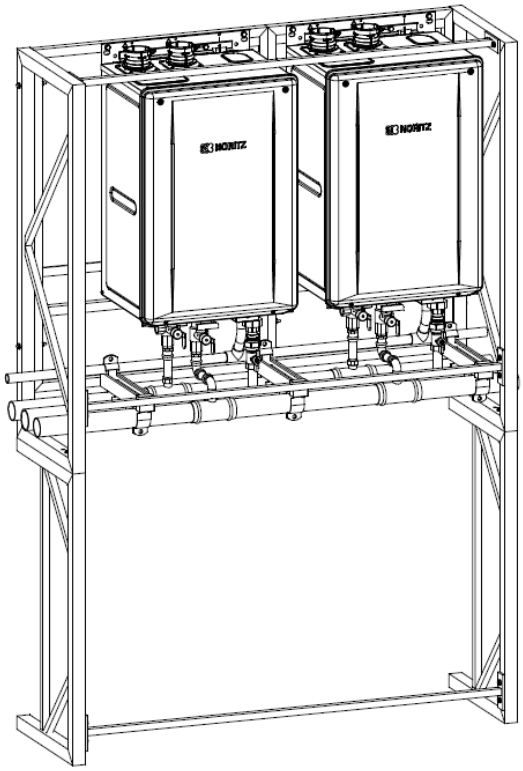

Commercial Water Heating System Floor Standing			
Model Number	**Rack Type**	**Configuration**	**Illustration**
CR60-FS-4-NG	4 Unit, Floor Standing, NG		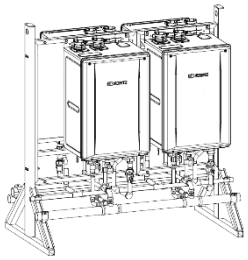
CR60-FS-4-LP	4 Unit, Floor Standing, LP		
CR60-FS-5-NG	5 Unit, Floor Standing, NG		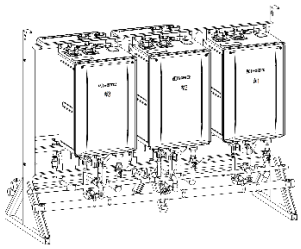
CR60-FS-5-LP	5 Unit, Floor Standing, LP		
CR60-FS-6-NG	6 Unit, Floor Standing, NG	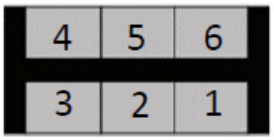	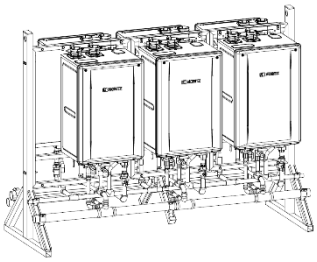
CR60-FS-6-LP	6 Unit, Floor Standing, LP		

Illustrated: CR60-FS-6

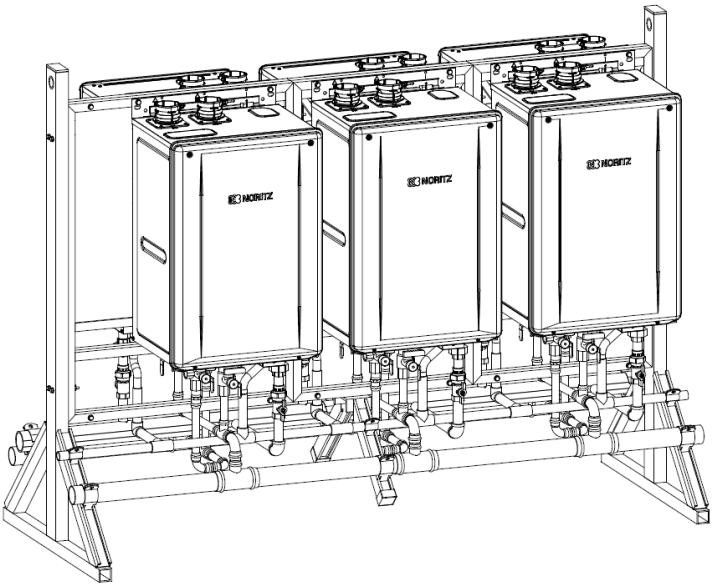

CR60-WH-2 Specifications

BTU and Flow Rates for NCC199CDV (GQ-C3260WZ-FF US)	
Number of Tankless Water Heaters	2
Max. Hot Water Capacity @ 30°F rise (GPM)	22.2
Max. Hot Water Capacity @ 70°F rise (GPM)	11.2
Minimum (Btuh)	18,000
Maximum (Btuh)	399,800

Model and Rack Specifications	
Model Number	CR60-WH-2
Gas Type	Natural or Propane
Tankless Water Heater Model	NCC199CDV
System Controller Model	SC-401-6M
Remote Model	RC-9018M
Frame Dimensions (in)	52.25 (L) x 17.0 (D) x 44.0 (H) [H: 77 with optional floor support]
Weight -Fully Assembled (lbs)	259
Shipping Weight -Fully Assembled (lbs)	429
Frame Material	Aluminum
Frame Color	Aluminum
Water & Gas Pipe Connections	
Hot Water Manifold Pipe Material	Copper (Type L)
Cold Water Manifold Pipe Material	Copper (Type L)
Gas Manifold Pipe Material	Black Iron
Condensate Drain Manifold Pipe Material	Schedule 40 PVC
Hot Water Manifold Pipe Diameter (in)	2
Cold Water Manifold Pipe Diameter (in)	2
Gas Manifold Pipe Diameter (in)	2
Condensate Drain Manifold Pipe Diameter (in)	3/4
Pressure Relief Valve (in)	3/4
Pressure Relief Valve Max Pressure Rating (psi)	150
Electrical Requirements	
Voltage	120VAC (60 Hz)
Maximum Current (Amps)	8

2 Unit Drawing Illustration / Dimensions

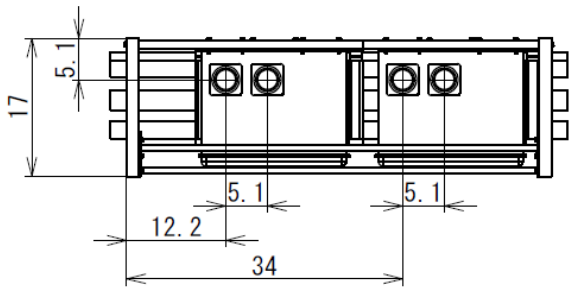

≪Top≫

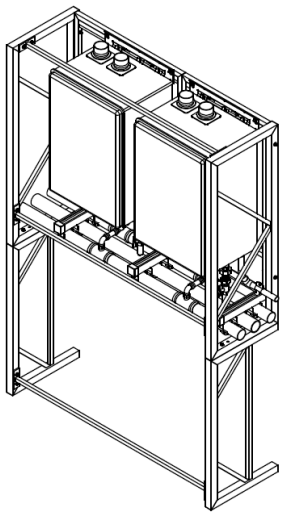

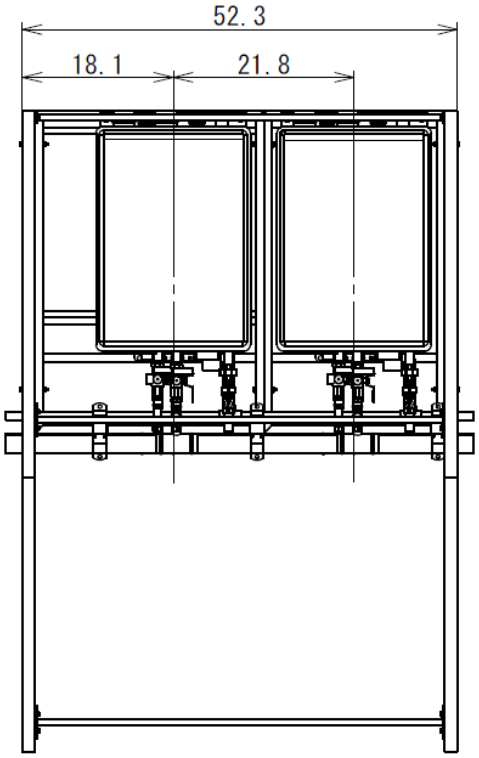

≪Front≫

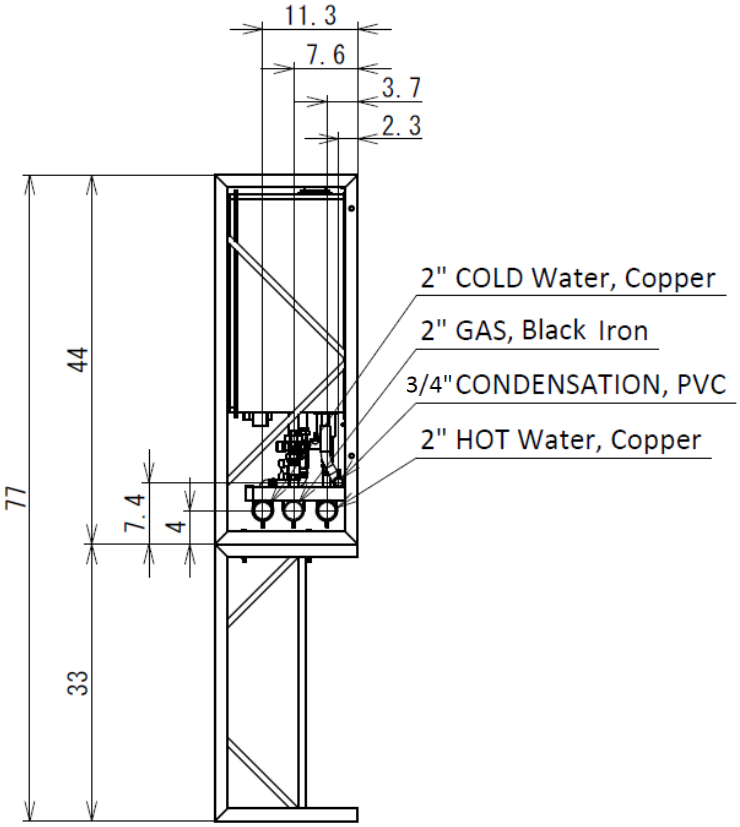

≪Right≫

**All Units are in inches*

CR60-WH-3 Specifications

BTU and Flow Rates for NCC199CDV (GQ-C3260WZ-FF US)	
Number of Tankless Water Heaters	3
Max. Hot Water Capacity @ 30°F rise (GPM)	33.3
Max. Hot Water Capacity @ 70°F rise (GPM)	16.8
Minimum (Btuh)	18,000
Maximum (Btuh)	599,700

Model and Rack Specifications	
Model Number	CR60-WH-3
Gas Type	Natural or Propane
Tankless Water Heater Model	NCC199CDV
System Controller Model	SC-401-6M
Remote Model	RC-9018M
Rack Frame Dimensions (in)	74.0 (L) x 17.0 (D) x 44.0 (H) [H: 77 with optional floor support]
Weight -Fully Assembled (lbs)	386
Shipping Weight -Fully Assembled (lbs)	616
Frame Material	Aluminum
Frame Color	Aluminum
Water & Gas Pipe Connections	
Hot Water Manifold Pipe Material	Copper (Type L)
Cold Water Manifold Pipe Material	Copper (Type L)
Gas Manifold Pipe Material	Black Iron
Condensate Drain Manifold Pipe Material	Schedule 40 PVC
Hot Water Manifold Pipe Diameter (in)	2
Cold Water Manifold Pipe Diameter (in)	2
Gas Manifold Pipe Diameter (in)	2
Condensate Drain Manifold Pipe Diameter (in)	3/4
Pressure Relief Valve (in)	3/4
Pressure Relief Valve Max Pressure Rating (psi)	150
Electrical Requirements	
Voltage	120VAC (60 Hz)
Maximum Current (Amps)	12

3 Unit Drawing Illustration / Dimensions

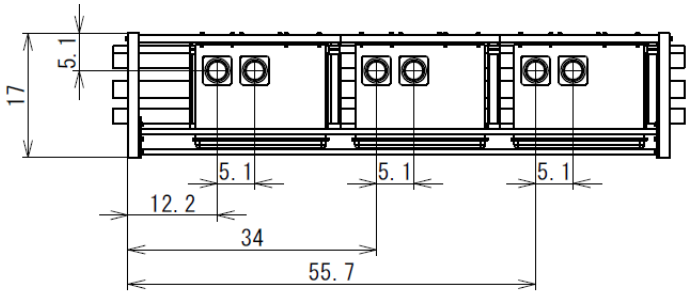

≪Top≫

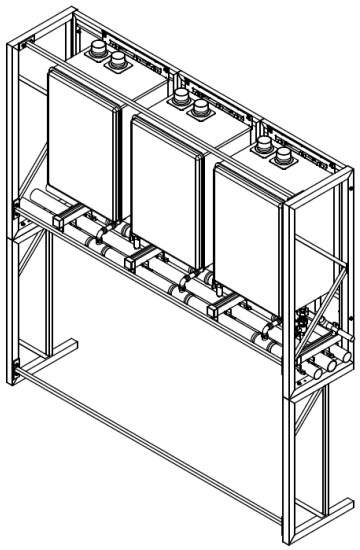

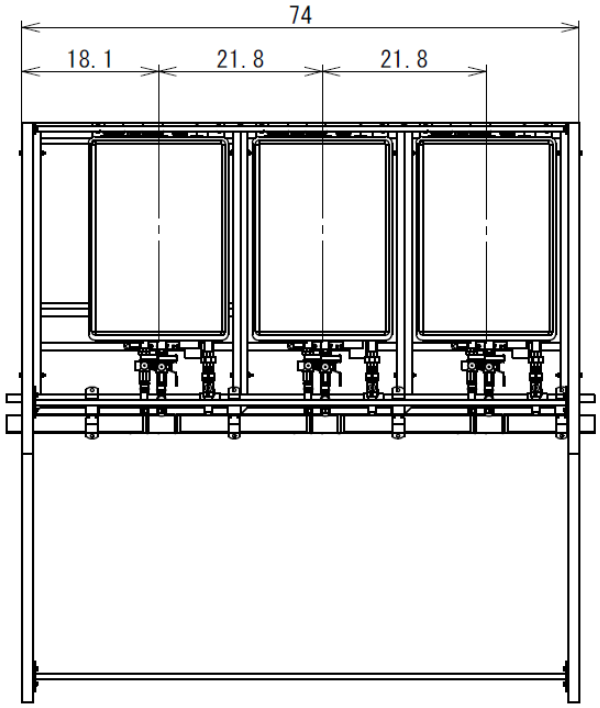

≪Front≫

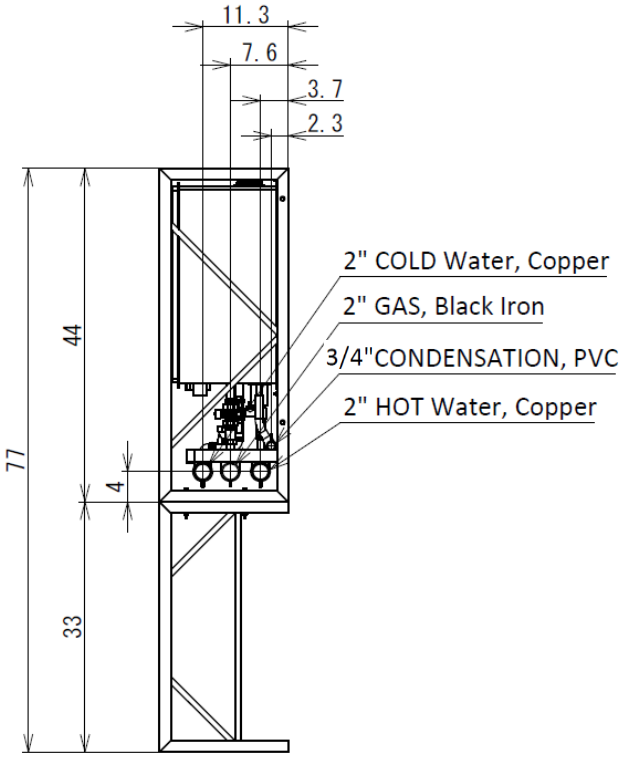

≪Right≫

**All Units are in inches*

CR60-FS-4 Specifications

BTU and Flow Rates for NCC199CDV (GQ-C3260WZ-FF US)	
Number of Tankless Water Heaters	4
Max. Hot Water Capacity @ 30°F rise (GPM)	44.4
Max. Hot Water Capacity @ 70°F rise (GPM)	22.4
Minimum (Btuh)	18,000
Maximum (Btuh)	799,600

Model and Rack Specifications	
Model Number	CR60-FS-4
Gas Type	Natural or Propane
Tankless Water Heater Model	NCC199CDV
System Controller Model	SC-401-6M
Remote Model	RC-9018M
Rack Frame Dimensions (in)	52.25 (L) x 30.0(D) x 56.75 (H)
Weight -Fully Assembled (lbs)	444
Shipping Weight -Fully Assembled (lbs)	904
Frame Material	Aluminum
Frame Color	Aluminum
Water & Gas Pipe Connections	
Hot Water Manifold Pipe Material	Copper (Type L)
Cold Water Manifold Pipe Material	Copper (Type L)
Gas Manifold Pipe Material	Black Iron
Condensate Drain Manifold Pipe Material	Schedule 40 PVC
Hot Water Manifold Pipe Diameter (in)	2
Cold Water Manifold Pipe Diameter (in)	2
Gas Manifold Pipe Diameter (in)	2
Condensate Drain Manifold Pipe Diameter (in)	3/4
Pressure Relief Valve (in)	3/4
Pressure Relief Valve Max Pressure Rating (psi)	150
Electrical Requirements	
Voltage	120VAC (60 Hz)
Maximum Current (Amps)	16

4 Unit Drawing Illustration / Dimensions

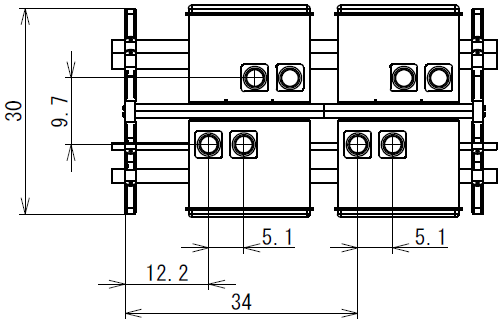

≪Top≫

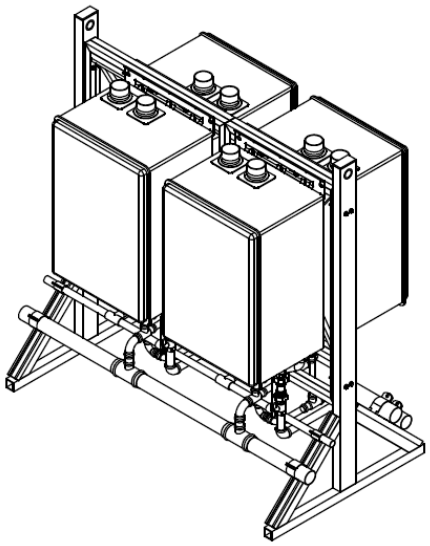

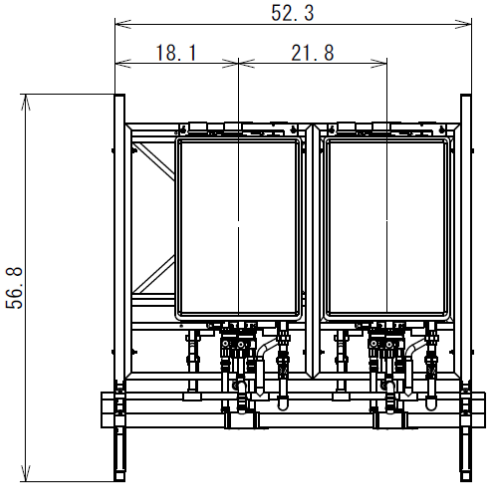

≪Front≫

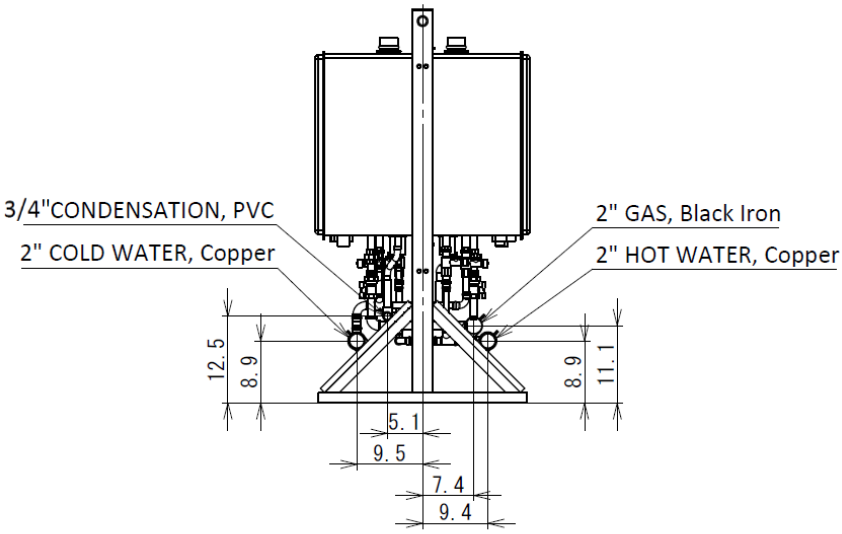

≪Right≫

**All Units are in inches*

CR60-FS-5 Specifications

BTU and Flow Rates for NCC199CDV (GQ-C3260WZ-FF US)	
Number of Tankless Water Heaters	5
Max. Hot Water Capacity @ 30°F rise (GPM)	55.5
Max. Hot Water Capacity @ 70°F rise (GPM)	28.0
Minimum (Btuh)	18,000
Maximum (Btuh)	999,500

Model and Rack Specifications	
Model Number	CR60-FS-5
Gas Type	Natural or Propane
Tankless Water Heater Model	NCC199CDV
System Controller Model	SC-401-6M
Remote Model	RC-9018M
Rack Frame Dimensions (in)	74.0 (L) x 30.0(D) x 56.75 (H)
Weight -Fully Assembled (lbs)	560
Shipping Weight -Fully Assembled (lbs)	1160
Frame Material	Aluminum
Frame Color	Aluminum
Water & Gas Pipe Connections	
Hot Water Manifold Pipe Material	Copper (Type L)
Cold Water Manifold Pipe Material	Copper (Type L)
Gas Manifold Pipe Material	Black Iron
Condensate Drain Manifold Pipe Material	Schedule 40 PVC
Hot Water Manifold Pipe Diameter (in)	2
Cold Water Manifold Pipe Diameter (in)	2
Gas Manifold Pipe Diameter (in)	2
Condensate Drain Manifold Pipe Diameter (in)	3/4
Pressure Relief Valve (in)	3/4
Pressure Relief Valve Max Pressure Rating (psi)	150
Electrical Requirements	
Voltage	120VAC (60 Hz)
Maximum Current (Amps)	20

5 Unit Drawing Illustration / Dimensions

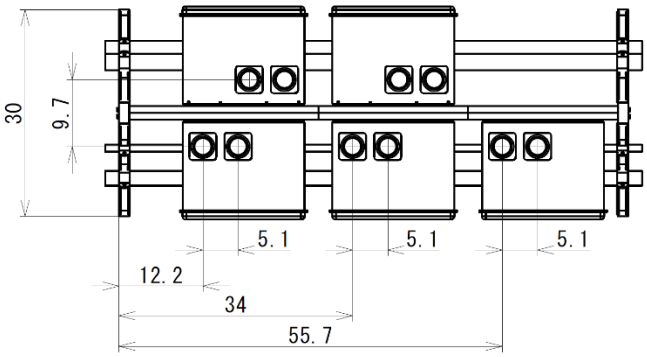

≪Top≫

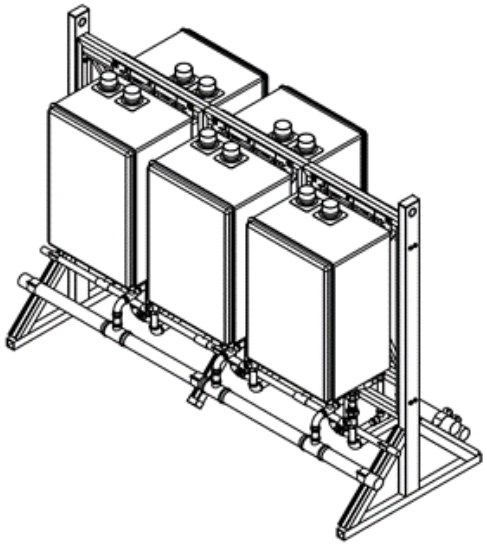

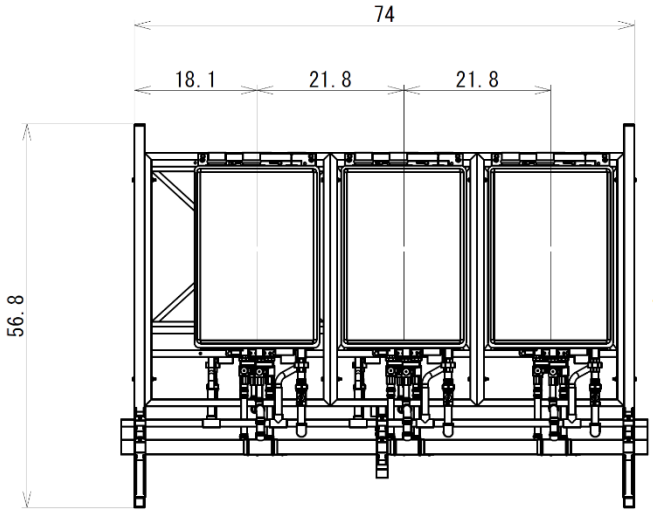

≪Front≫

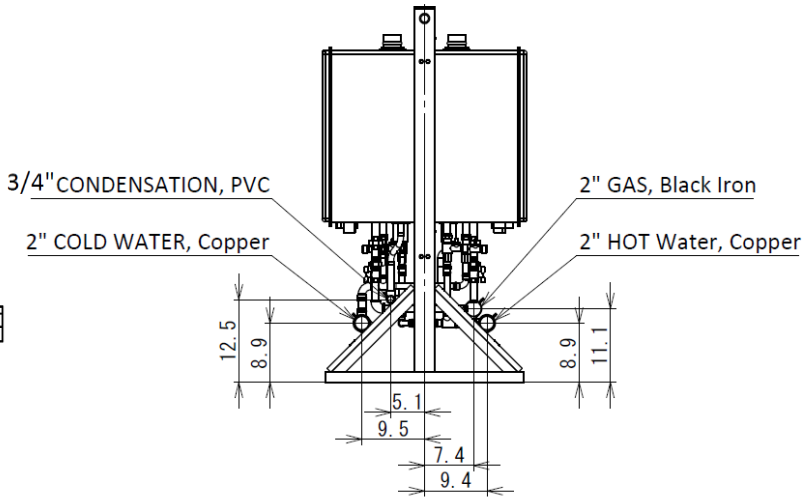

≪Right≫

**All Units are in inches*

CR60-FS-6 Specifications

BTU and Flow Rates for NCC199CDV (GQ-C3260WZ-FF US)	
Number of Tankless Water Heaters	6
Max. Hot Water Capacity @ 30°F rise (GPM)	66.6
Max. Hot Water Capacity @ 70°F rise (GPM)	33.6
Minimum (Btuh)	18,000
Maximum (Btuh)	1,199,400

Model and Rack Specifications	
Model Number	CR60-FS-6
Gas Type	Natural or Propane
Tankless Water Heater Model	NCC199CDV
System Controller Model	SC-401-6M
Remote Model	RC-9018M
Rack Frame Dimensions (in)	74.0 (L) x 30.0(D) x 56.75 (H)
Weight -Fully Assembled (lbs)	641
Shipping Weight -Fully Assembled (lbs)	1241
Frame Material	Aluminum
Frame Color	Aluminum
Water & Gas Pipe Connections	
Hot Water Manifold Pipe Material	Copper (Type L)
Cold Water Manifold Pipe Material	Copper (Type L)
Gas Manifold Pipe Material	Black Iron
Condensate Drain Manifold Pipe Material	Schedule 40 PVC
Hot Water Manifold Pipe Diameter (in)	2
Cold Water Manifold Pipe Diameter (in)	2
Gas Manifold Pipe Diameter (in)	2
Condensate Drain Manifold Pipe Diameter (in)	3/4
Pressure Relief Valve (in)	3/4
Pressure Relief Valve Max Pressure Rating (psi)	150
Electrical Requirements	
Voltage	120VAC (60 Hz)
Maximum Current (Amps)	24

6 Unit Drawing Illustration / Dimensions

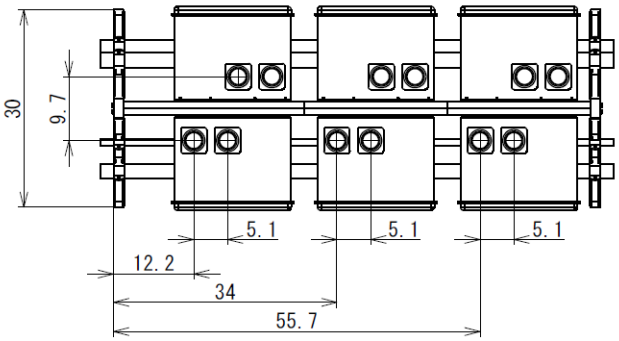

≪Top≫

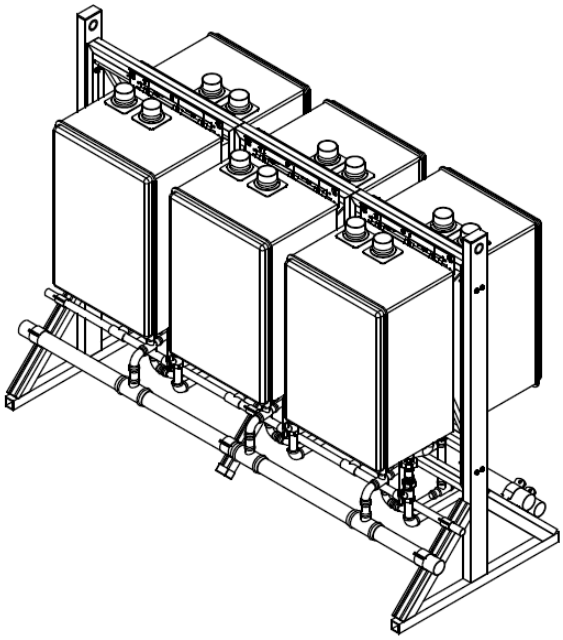

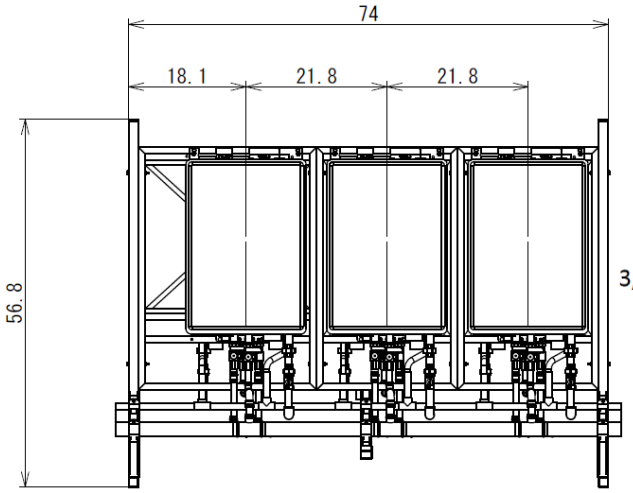

≪Front≫

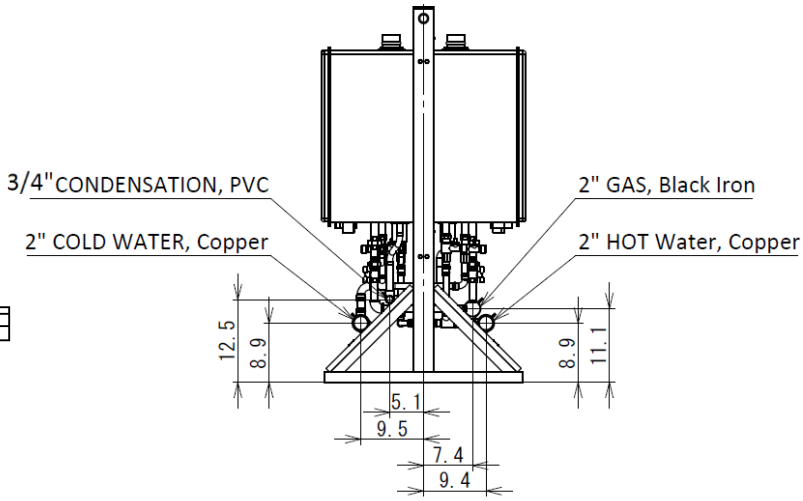

≪Right≫

**All Units are in inches*

Performance Specification

TANKLESS WITHOUT STORAGE HOT WATER SUPPLY CAPACITY											
MODEL	**QTY HEATER**	**HEATER CONFIGURATION**	**MIN - MAX INPUT (BTU/HR)**	**FLOWRATE (GPM) @ TEMP RISE**							**Max. Btu/Hr Input**
				50	**60**	**70**	**80**	**90**	**100**	**110**	
CR60-WH-2	2	Wall Hung In-Series	18,000 - 399,800	15.7	13.1	11.2	9.8	8.7	7.8	7.1	399,800
CR60-WH-3	3	Wall Hung In-Series	18,000- 599,700	23.5	19.6	16.8	14.7	13.1	11.8	10.7	599,700
CR60-FS-4	4	Floor Standing 2+2 Back-to-Back	18,000 - 799,600	31.3	26.1	22.4	19.6	17.4	15.7	14.2	799,600
CR60-FS-5	5	Floor Standing 3+2 Back-to-Back	18,000 - 999,500	39.2	32.7	28.0	24.5	21.8	19.6	17.8	999,500
CR60-FS-6	6	Floor Standing 3+3 Back-to-Back	18,000 - 1,199,400	47.0	39.2	33.6	29.4	26.1	23.5	21.4	1,199,400

Tankless with Storage Performance

MODEL	QTY HEATERS	MAX INPUT (BTU/HR)	TANK VOLUME (GAL)	TANK RECOVERY PUMP SIZE		UEF / TE	TEMP RISE [DEG F]		
							60		
				GPM	HEAD (PSI)		RECOVERY (GPM)	RECOVERY (GPH)	1ST HR. DELIVERY (GPH)
CR60-WH-2	2	398,000	100	12	8.9	97% / 98%	13.0	780	70
			200						140
			300						210
CR60-WH-3	3	597,000	150	18	8.9	97% / 98%	19.5	1170	105
			200						140
			300						210
			400						280
CR60-FS-4	4	796,000		24	8.9	97% / 98%	26.0	1560	
			200						140
			300						210
			400						280
			500						350
CR60-FS-5	5	995,000		30	8.9	97% / 98%	32.5	1950	
			250						175
			300						210
			400						280
			500						350
CR60-FS-6	6	1,194,000		36	8.9	97% / 98%	39.0	2340	
			300						210
			400						280
			500						350

MODEL	QTY HEATERS	TANK VOLUME (GAL)	TEMP RISE [DEG F]					
			70			80		
			RECOVERY (GPM)	RECOVERY (GPH)	1ST HR. DELIVERY (GPH)	RECOVERY (GPM)	RECOVERY (GPH)	1ST HR. DELIVERY (GPH)
CR60-WH-2	2	100	5.6	334	70	4.9	293	70
		200			140			140
		300			210			210
CR60-WH-3	3	150	5.6	334	105	4.9	293	105
		200			140			140
		300			210			210
		400			280			280
CR60-FS-4	4		5.6	334		4.9	293	
		200			140			140
		300			210			210
		400			280			280
		500			350			350
CR60-FS-5	5		5.6	334		4.9	293	
		250			175			175
		300			210			210
		400			280			280
		500			350			350
CR60-FS-6	6		5.6	334		4.9	293	
		300			210			210
		400			280			280
		500			350			350

MODEL	QTY HEATERS	TANK VOLUME (GAL)	TEMP RISE [DEG F]					
			90			100		
			RECOVERY (GPM)	RECOVERY (GPH)	1ST HR. DELIVERY (GPH)	RECOVERY (GPM)	RECOVERY (GPH)	1ST HR. DELIVERY (GPH)
CR60-WH-2	2	100	4.3	260	70	3.9	234	70
		200			140			140
		300			210			210
CR60-WH-3	3	150	4.3	260	105	3.9	234	105
		200			140			140
		300			210			210
		400			280			280
CR60-FS-4	4		4.3	260		3.9	234	
		200			140			140
		300			210			210
		400			280			280
		500			350			350
CR60-FS-5	5		4.3	260		3.9	234	
		250			175			175
		300			210			210
		400			280			280
		500			350			350
CR60-FS-6	6		4.3	260		3.9	234	
		300			210			210
		400			280			280
		500			350			350

Multi System Controller

- The CR60 comes pre-installed with a system controller for up to 6 units (SC-401-6M).
- Each Noritz tankless water heater will be electronically connected with the multi system controller.

Basic Operation

The SC-401-6M system controller is used to combine 1 to 6 Noritz heaters into a single "multi-unit system" The system controller stages units on and off based on hot water demand and rotates their operation to ensure even usage. It also has two additional modes which optimize the system for operation with a recirculation line or storage tank.

(Note: for systems of 7-12 units use the SCU-401-12M system controller
for systems of 13-24 units use the SCU-401-24M system controller)

Unit Staging

Staging allows the multi-unit system to track hot water demand from the minimum flow rate of a single unit up to the maximum output of several units. When the primary firing heater reaches ~50% of its maximum output, the system controller activates the next unit in the system. When both these units reach ~50% of their maximum output, a third unit is activated and so on. The SC-401-6M may also be configured to activate two heaters during primary firing to allow for rapid initial hot water demand.

Unit Rotation

The SC-401-6M system controller rotates operation of the primary firing heater every 8 hours of combustion time or up to 24 hours of plug-in time. This helps to ensure even usage of all units.

UNIT1	UNIT2	UNIT3	UNIT4	UNIT5	UNIT6
1st	2nd	3rd	4th	5th	6th
					Rotation
6th	1st	2nd	3rd	4th	5th
					Rotation
5th	6th	1st	2nd	3rd	4th
					Rotation
4th	5th	6th	1st	2nd	3rd

System Selection

The SC-401-6M allows the user to select two additional system types: "Recirc" and "Tank recirc." These settings optimize performance with recirculation and storage tank systems, and allow the system controller to operate one or two pumps.

<Recirc>

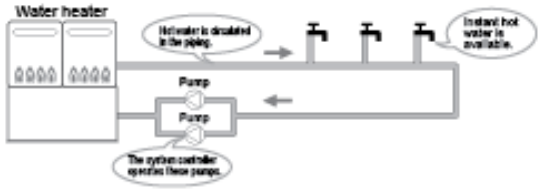

<Tank recirc>

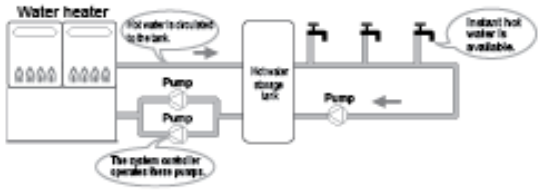

* These diagrams are for illustration purposes only.